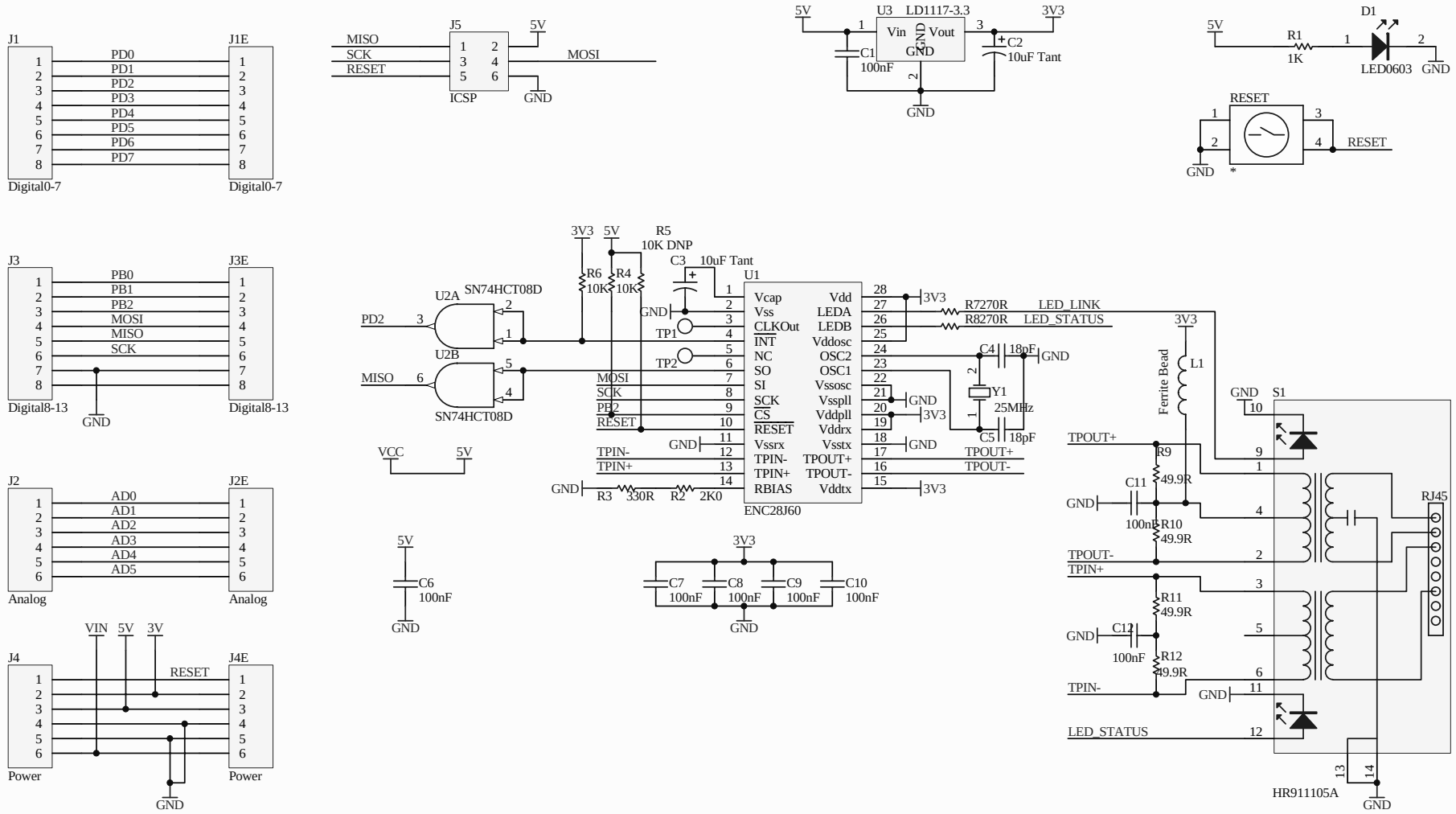

Title		
Size A4	Number	Revision
Date: 27/12/2007	Sheet of	
File: C:\xing\..\Ethernet_v1.SchDoc	Drawn By:	